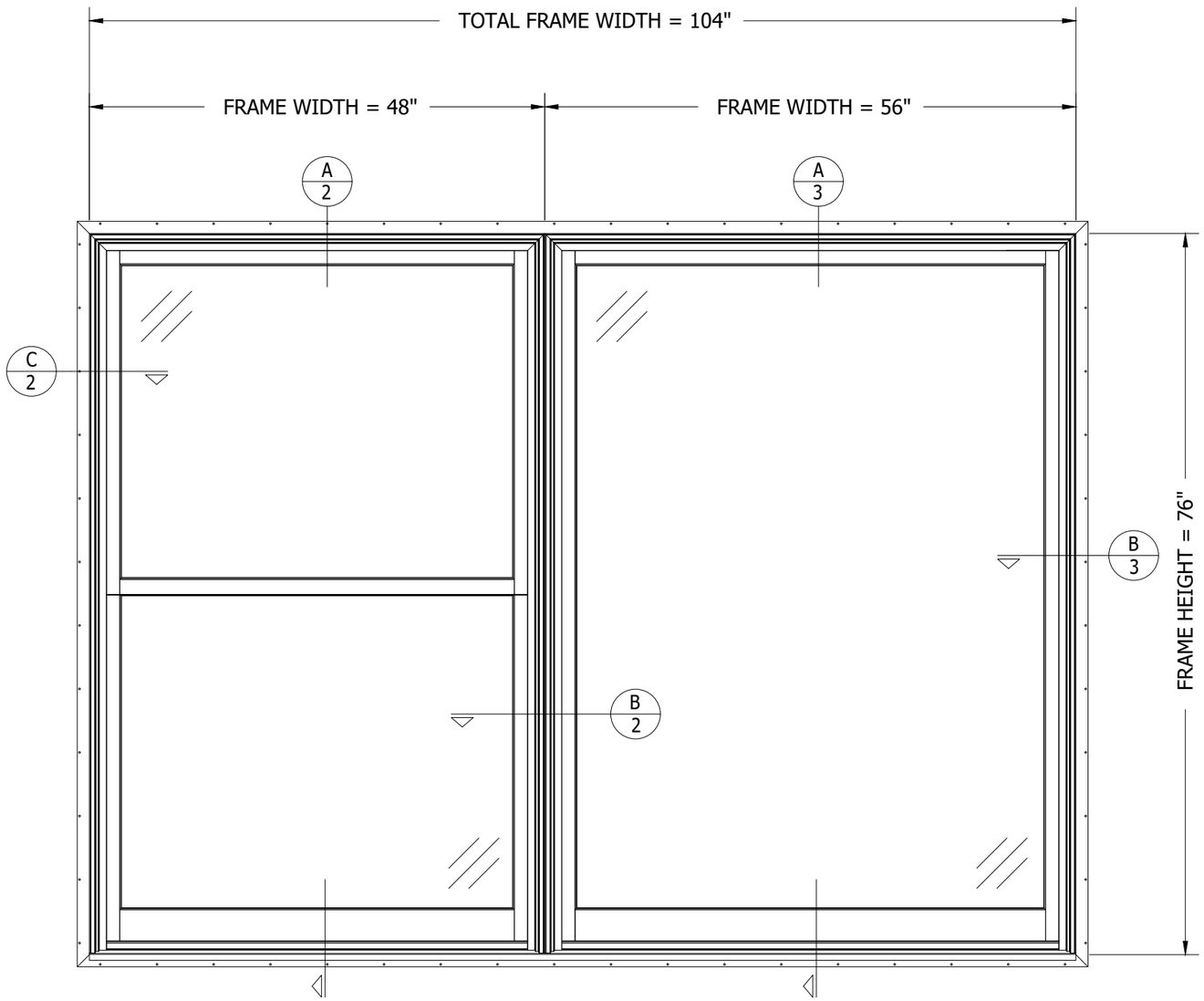

EXTERIOR ELEVATION
DOUBLE HUNG - TILT CLASS
MULLED TO DOUBLE HUNG FIXED

General Notes:

1. ALL FASTENERS SHALL BE IN ACCORDANCE WITH THESE DRAWINGS. SPECIFIED ANCHOR EMBED TO BASE MATERIAL SHALL BE BEYOND WALL FINISH OR STUCCO.
2. OPENING, BUCKING & BUCKING FASTENERS MUST BE PROPERLY DESIGNED & INSTALLED TO TRANSFER WIND LOADS TO THE STRUCTURE.
3. THESE NON-IMPACT RATED WINDOW SYSTEM INSTALLATIONS ARE IN ACCORDANCE WITH AND MEET THE REQUIREMENTS OF THE FLORIDA BUILDING CODE (FBC)
4. ALL ANCHORS SECURING WINDOW FRAME TO PRESSURE TREATED BUCKS OR WOOD FRAMING SHALL BE CAPABLE OF RESISTING CORROSION CAUSED BY THE PRESSURE TREATED CHEMICALS IN THE WOOD.
5. MATERIALS, INCLUDING BUT NOT LIMITED TO STEEL SCREWS, THAT COME INTO CONTACT WITH OTHER DISSIMILAR MATERIALS SHALL MEET THE REQUIREMENTS OF FLORIDA BUILDING CODE CHAPTER 20.

CONSTRUCTION:

RECTANGULAR FRAME:
MEMBERS ARE RABBETTED, BUTTED AND JOINED WITH (3) THREE 16GA. X 7/16" (11mm) X 1 3/4" (45mm) STAPLES THROUGH THE HORIZONTAL FRAME MEMBERS INTO THE VERTICAL MEMBERS & (2) TWO
16GA. X 7/16" (11mm) X 1 3/4" (45mm) STAPLES THROUGH THE VERTICAL MEMBERS INTO THE HORIZONTAL MEMBERS. CORNERS ARE SEALED WITH POLYURETHANE SEALANT.

RECTANGULAR SASH:
MEMBERS ARE COPED, BUTTED AND JOINED WITH (3) THREE 1/4" (6mm) X 1 3/8" (35mm) DOWELS AND
PVA RESIN PER SASH JOINT. (NOTE: 3 1/2" (35mm) SILL RAIL MEMBER CONTAINS (5) FIVE DOWELS)

FRAME CLAD:
MITERED MEMBERS ARE JOINED VIA AN INJECTABLE CORNER KEY (ITEM #49 FOR RECTANGULAR UNITS &
ITEM #49A FOR SHAPED UNITS) & WITH (2) TWO NO. 6 X 3/8" (10mm) SMS SCREW PER CORNER.
SLOPED SILL MEMBERS ARE JOINED VIA BUTT JOINT USING AN INJECTABLE CORNER KEY WITH (1) ONE
NO. 6 X 3/8" (10mm) SMS SCREW HORIZONTALLY THROUGH THE JAMB & (1) ONE NO. 6 X 1" (25mm)
SMS SCREW VERTICALLY THROUGH THE SILL. ALL CORNERS ARE SEALED WITH POLYURETHANE SEALANT.

SASH CLAD:
RAIL CLADDING IS COPED INTO STILE CLADDING & MEMBERS ARE SECURED TO THE SASH WITH CLADDING RETAINER.

LIMITS OF USE:
APPROVED FOR USE IN HVWZ: NO
APPROVED FOR USE OUTSIDE HVWZ: YES
IMPACT RESISTANT: NO
GLASS SHALL CONFORM TO THE CURRENT ASTM E1300 STANDARD

TEST DESIGN PRESSURE: +35/-35 PSF

MODEL: DOUBLE HUNG - TILT CLASS MULLED TO DOUBLE HUNG FIXED.

INSTALLATION METHOD:
10 GAUGE x 2" ROOFING NAILS, 3.75" OF CORNERS, 6" (153mm) OC.
#7 X 2 1/2" (64mm) SCREWS AT THE LOCATIONS MARKED ,
OTHERS WITHOUT ARE #7 X 1 1/4" (32mm).
SILICONE SEALANT APPLIED TO SEAL FLANGE TO BUCK.

FRAME ANCHOR REQUIREMENTS TABLE

NAILING FIN FASTENERS

OPENING TYPE (SUBSTRATE)	NAIL FIN TO OPENING FASTENER TYPE	MINIMUM EMBED	MINIMUM EDGE DIST.
MIN. 2X4 WOOD FRAME OR BUCK (MIN. GR. 3 & G=0.55)	10 gauge x 2" roofing nails	1 3/8"	1/2"

DRAWN BY: HD	CHECKED BY:
PLOT:	DATE: 05/05/2017

NO.	REVISION DESCRIPTION	BY	DATE
A	REVISE FRAME CLADDING	DL	01SEP2024

MANUFACTURER
C.P. LOEWEN ENTERPRISES LTD.
77 HWY 52 WEST
STEINBACH, MB CANADA R5G 1B2
204-326-6446

DRAWING TITLE
DOUBLE HUNG PHASE 1

DRAWING NO. 25AWS06
REV. A
SHEET NO. 1 OF 3

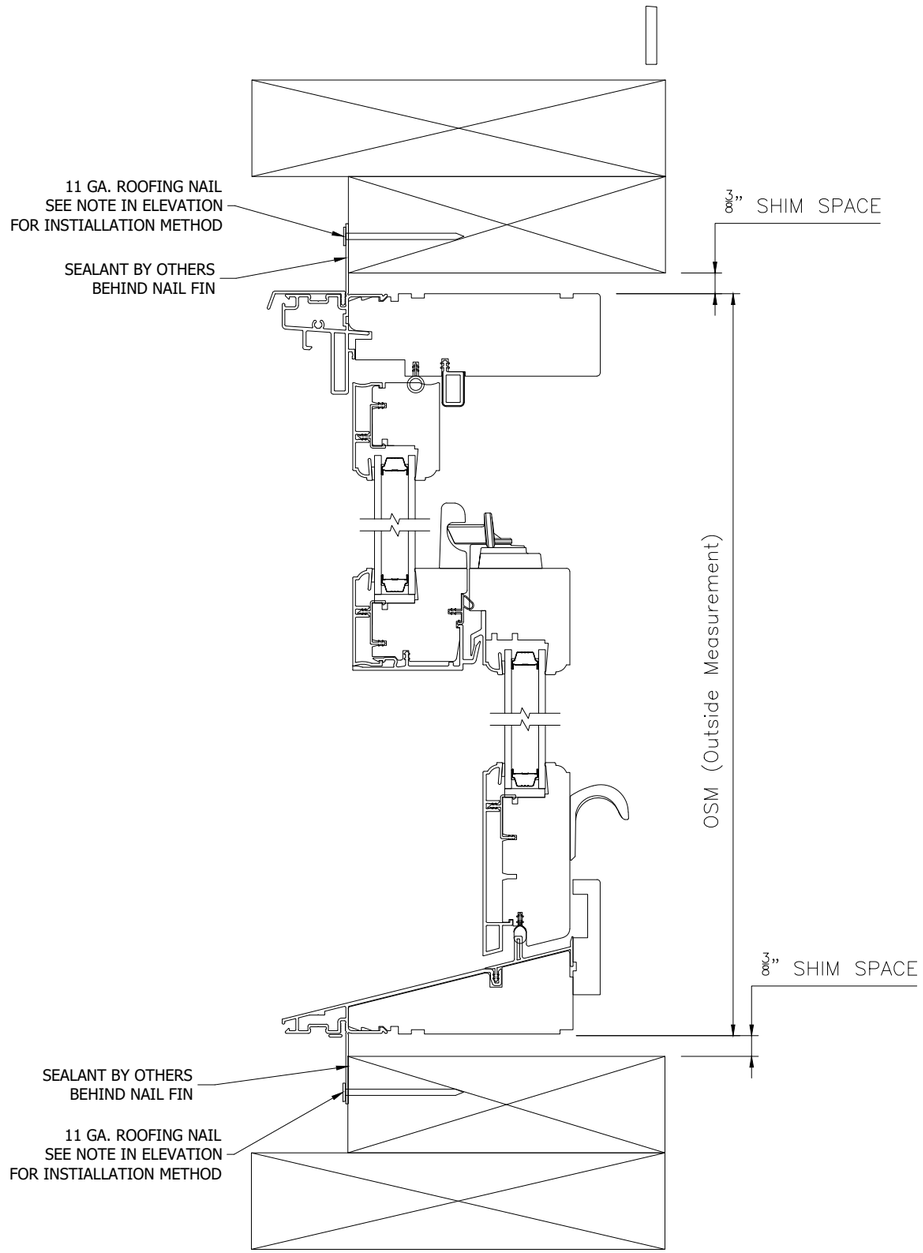

SECTION A/2
SCALE: 1:1

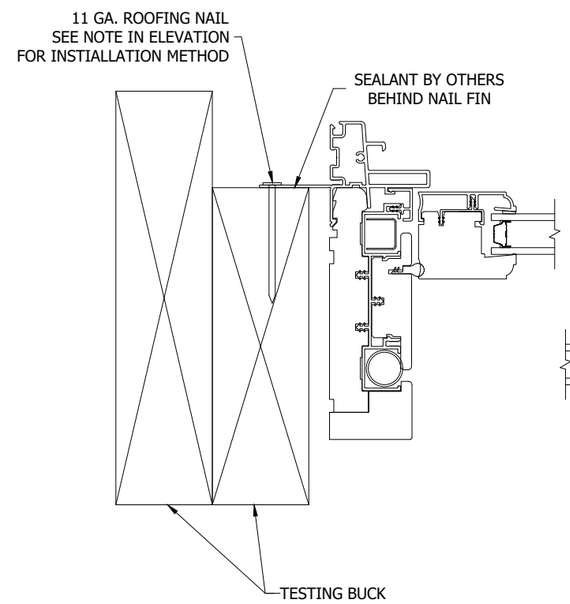

SECTION C/2
SCALE: 1:1

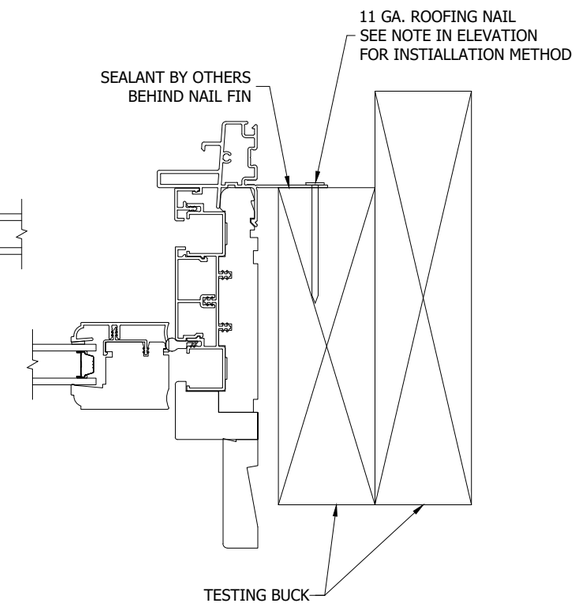

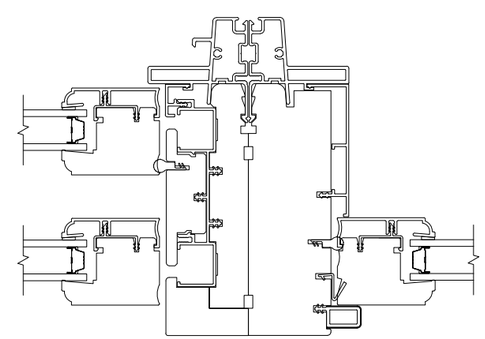

MULL DETAIL

SECTION B/2
SCALE: 1:1

DRAWN BY: HD	CHECKED BY:
PLOT:	DATE: 05/05/2017

NO.	REVISION DESCRIPTION	BY	DATE
A	REVISE FRAME CLADDING	DL	01SEP2024

MANUFACTURER
C.P. LOEWEN ENTERPRISES LTD.
77 HWY 52 WEST
STEINBACH, MB CANADA R5G 1B2
204-326-6446

DRAWING TITLE
DOUBLE HUNG PHASE 1

DRAWING NO. 25AWS06
REV. A
SHEET NO. 2 OF 3

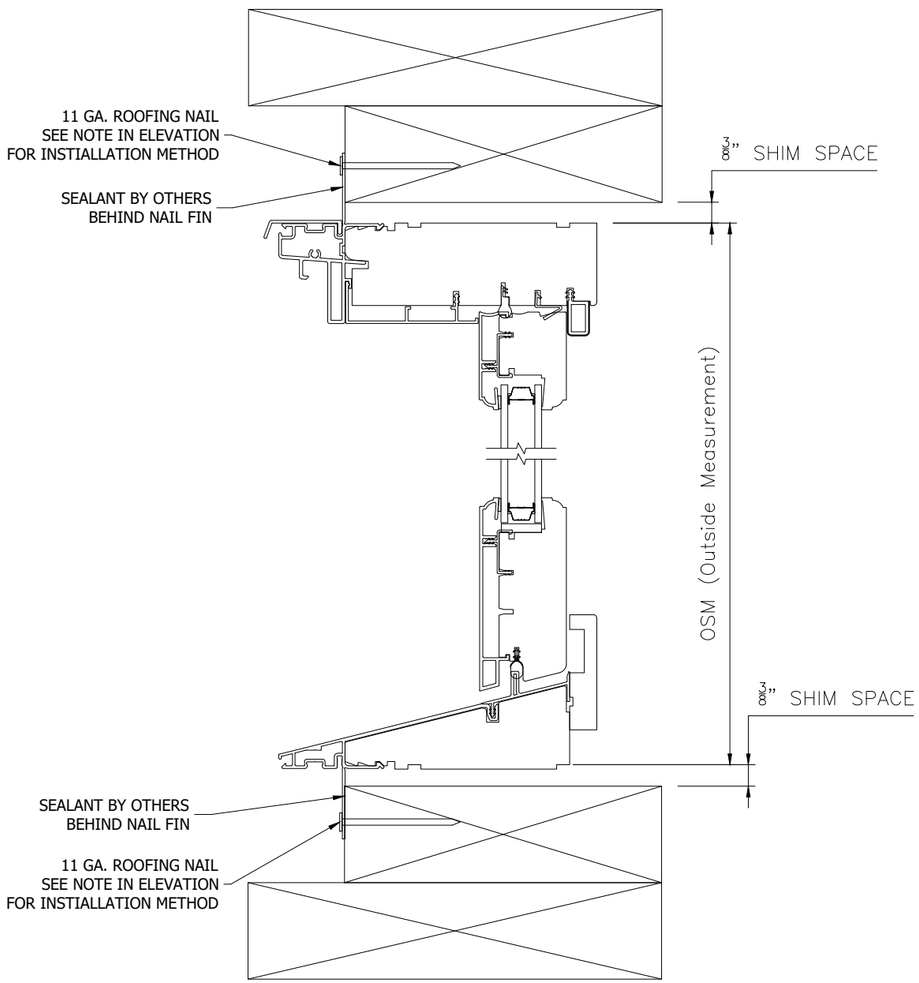

SECTION A/3
SCALE: 1:1

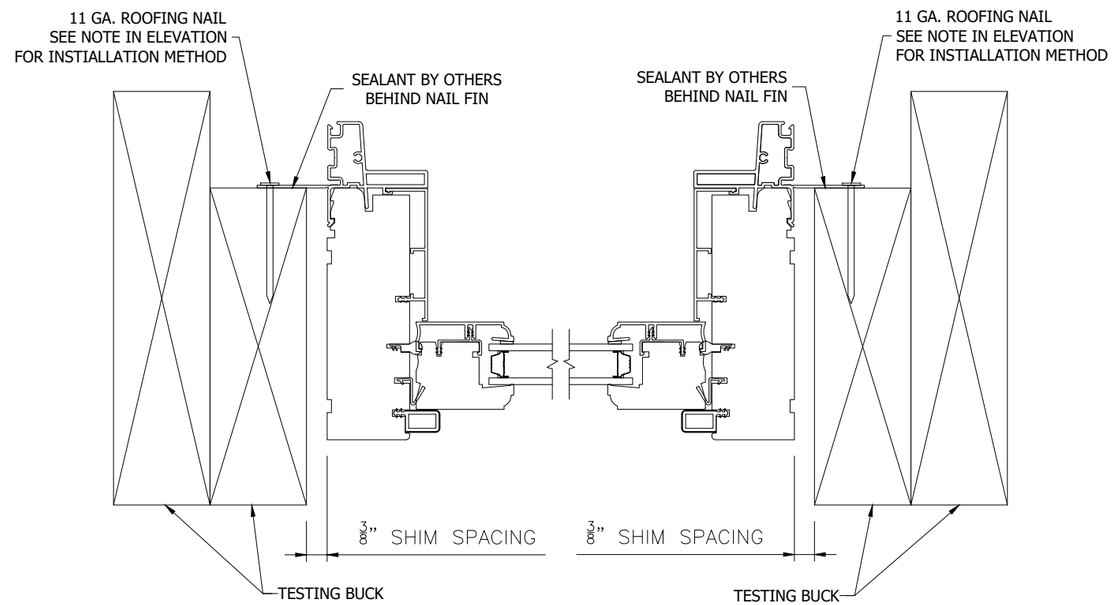

SECTION B/3
SCALE: 1:1

DRAWN BY: HD	CHECKED BY:
PLOT:	DATE: 05/05/2017

NO.	REVISION DESCRIPTION	BY	DATE
A	REVISE FRAME CLADDING	DL	01SEP2024

MANUFACTURER
C.P. LOEWEN ENTERPRISES LTD.
77 HWY 52 WEST
STEINBACH, MB CANADA R5G 1B2
204-326-6446

DRAWING TITLE
DOUBLE HUNG PHASE 1

DRAWING NO. 25AWS06
REV. A
SHEET NO. 3 OF 3